General Description

APA102 is a type ic for the three-color RGB Diming control strip and string ,This ic using the CMOS process to provide three-color RGB LED output driver to adjust the output with 256 gray scale and 32 brightness adjustment ,APA with 2 signal output way , one is clock ,another is data, the clock and data is synchronizated ,so that the crystal cascade piece of output movement is sychronizated .

Feature

CMOS process,low voltage ,low consumption
Synchronization of two-lane
Choose positive output or negative RGB three-color LED output
8 bit(256 level) color set ,5bit(32 level) brightness adjustment
Build-20ma constant current output
With self-detection signal build in support for continuous oscillation PWM output ,can be maintained static screen

Application

LED lamp
LED Strip ,led pixel module
LED billboard LED screen

PRODUCT SPECIFICATIONS

Color	MCD	Refresh rate	Voltage	Power Consumption	Weight (g)	Angle	Dimensions (mm) L*W*H	Operating Temperature
Full color 1677216	**R:500-650mcd G:370-530mcd B:120-165mcd**	**400 cycle**	**DC5V**	**0.2W (MAX:1 W)**	**1**	**160**	**5x5x1.4**	**-40-70℃**



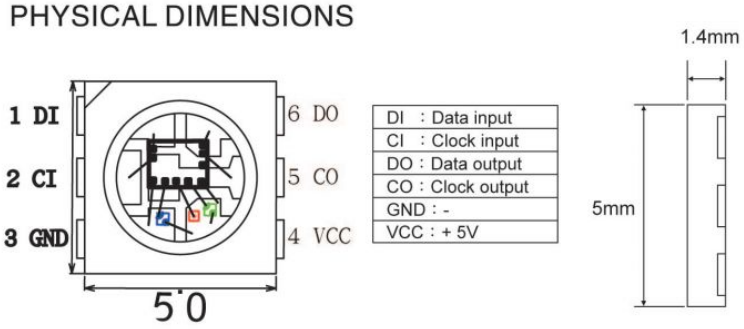

WW

（PIN Description）

NO.	PIN NAME	I/O	FUNCTION
1	VDD	P	Power is terminal
2	VREG	O	4.5V regulator output
3	CKO	O	Series with the output clock signal
4	SDO	O	Series with the output data
5	VEN	I	Self-test function selection
6	CSEL	I	Invert the clock signal cascade
7	POLAR	I	Positive and negative output options
8	OSCI	I	Oscillator input
9	SDI	I	Series with the input data
10	CKI	I	Series with the input clock signal
11	REXT	I	Constant current source to adjust side
12	VSS	P	Power supply negative terminal
13	G	O	Green LED output
14	R	O	Red LED output
15	B	O	Blue LED output

(Block diagram)

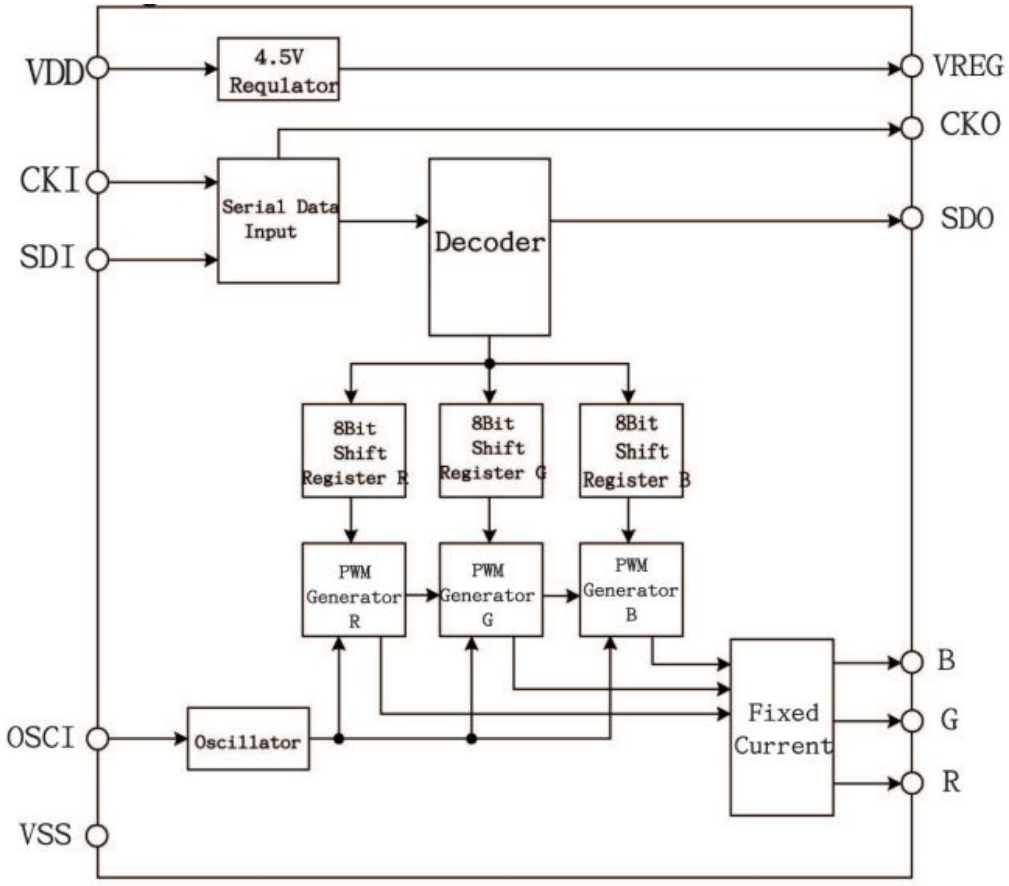

(Absolute Maximum Rating)

Supply volage ---------- -0.3-6.0V

Input voltage---------- VSS-0.3 to VDD +0.3V

Operating temperature---------- -40 to +70℃

Storage temperature---------- -50 to +125℃

Note: Stress above those listed may cause permanent damage to the devices

(Electrical Characteristic)

Symbol	Parameter	Condition	Min.	Typ.	MAX	Units
VDD	Supply Voltage			5.0	5.5	V
VIH	Input High Voltage		0.7VDD		VDD +0.3	V
VH	Input Low Voltage		VSS-0.3		0.3V DD	V
LOL	Sink Current Voltage(RGB)	VDD=5V, VOL>1V	22.5	24.5	26.5	mA
RIN	Pull High	VDD=5V		570		kΩ
VREG	Regulator Voltage(VREG)	VDD=5V	4.4	4.5	4.7	V
FOSC	Oscillator Frequency		800		1200	KHz

(Function Description)

(1) cascading data structure

Tabdem N-LED

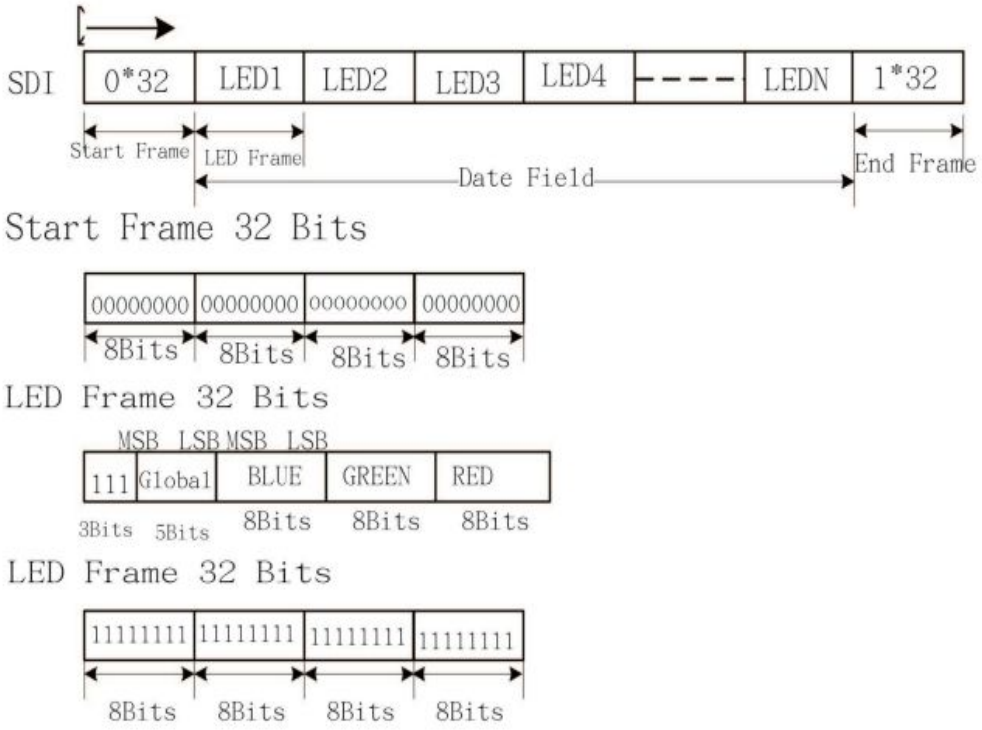

Global bit:5 bit (32 level) brightness setting,while controlling R,G,B three-color constant current output value,if set the global bit for the 10000(16/31) is the output current is half again the original PWM settings

DATA MSB←→LSB	Driving Current
00000	0/31
00001	1/31
00010	2/31
•••••	
11110	30/31
11111	31/31(max)

PWM input and output signals Relations

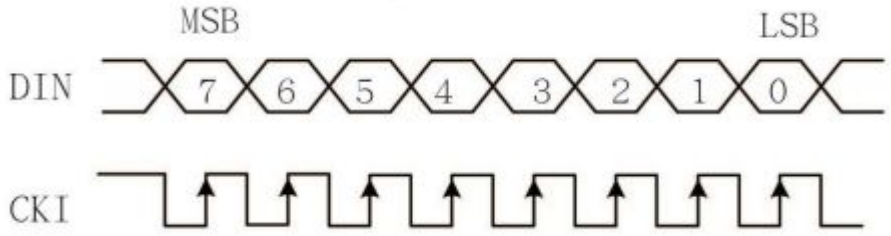

Data MSB--	Duty Cycle
00000000	0/256(min)
00000001	1/256
00000010	2/256
••••••••	
11111101	253/256
11111110	254/256
11111111	255/256(max)

(2). The number of pixel per second sent to the CKI frequency (FCKI) minus the Start Frame bit divided by the number 40 the number of LED Frame bit 32, if the CKI frequency(FCKI) to 512KHZ. The pixel number (512000-40)/32=15998, if the 50 second update Views can be connected in series LED number 15998/50=319. To increase the number of cascaded IC CKI frequency

(3).POLAR to empty ,R,G,B for the negative output;POLAR access VSS ,R,G,B is positive output

(4).VEN: self-detection

DATA field to the middle of 3 bit is B,G,R in the MSB of the opposite phase,otherwise regarded as invalid data. VEN close to the empty when the self-detection; when VEN VSS then activated self-detection

(5).CSEL to empty when the CKO and CKI,RP:CSEL connected with VSS when the

CKO compared with CKI.

Application Circuit

