Product Specifications

NAME : DALI LED Fluorescent Constant Current Dimmer
MODEL: LN-DALIDIMMER-LAMP-350mA



Summarization

DALI (Digital Addressable Lighting Interface) is an international standard, popular lighting control protocol, which adopt Manchester codes of digital transmission, with a whole grouping dimming, dimming addressing inquiries, and other powerful state lighting dimming function. Compared with the 0-10v analogue dimming, it's more precise dimming, addressable, stable, focus control, easy installation and so on.

This product adopt a standard DALI dimming signal to digital LED dimming using standard IEC60929. LED dimming with the traditional way of comparison, with adjustable light a wide range of diverse dimming, dimming of high precision, check the current status LED(such as the current brightness, power intensity, the minimum support brightness, address, etc.), easy distributed control and so on.

Technical parameters

- Working temperature: -20~60℃
- Supply voltage: AC85V-255V
- Dimming signal: DALI (IEC60929)

- Output way: constant current

- Dimming range: 0.1%-100%
- Gross weight: 203g
- Net weight: 166g
- Packing size: L122mm*W78mm*H32mm
- External dimension: L145X W95 X H50 mm
- Connect mode: Spring type exemption screw connection mode, Terminals caliber 2.6mm2.
- Output current: 350mA
- Output power: <16.8W

Function Features

- With a whole, grouping, addressing dimming.
- Through the preset scene dimming.
- The parameter of dimmer is flexible configuration.
- Demand the parameter of dimmer is possible.
- Function of parameter memory.
- International standard, the DALI equipment from different manufacturers can be compatible.
- The signal wire, regardless of positive and negative, do not need connect with alone, easy installation.

External Dimension

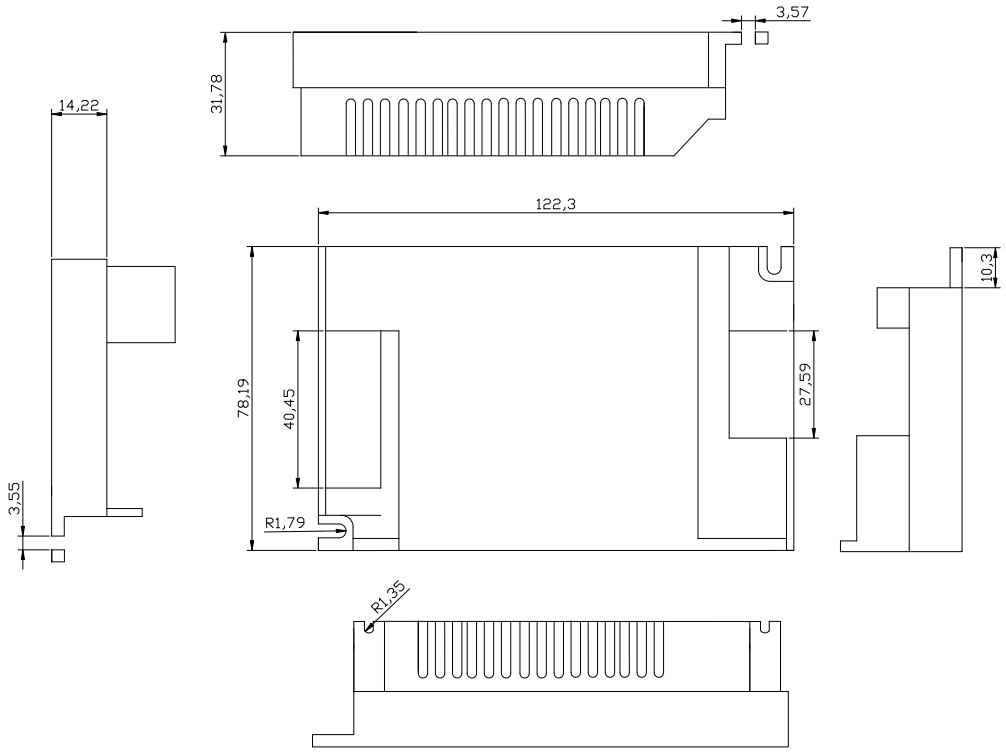

Interface Specifications

Power input and output interface:

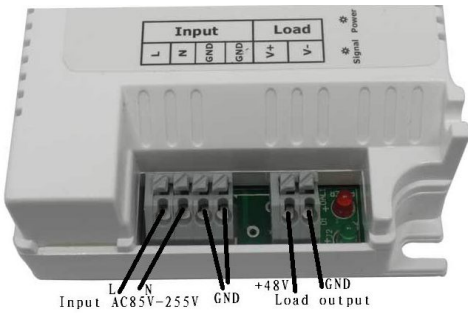

DALI signal input interface:



Direction for use

1.Connect the load wire at first, following by the power wire; Please ensure short circuit can not occur between connecting wire before you turn on the power;

2. Supply voltage is AC85V-255V, connect with DALI bus directly, accept the order from DALI bus, realize the dimming change within 0-48V.

Typical Application

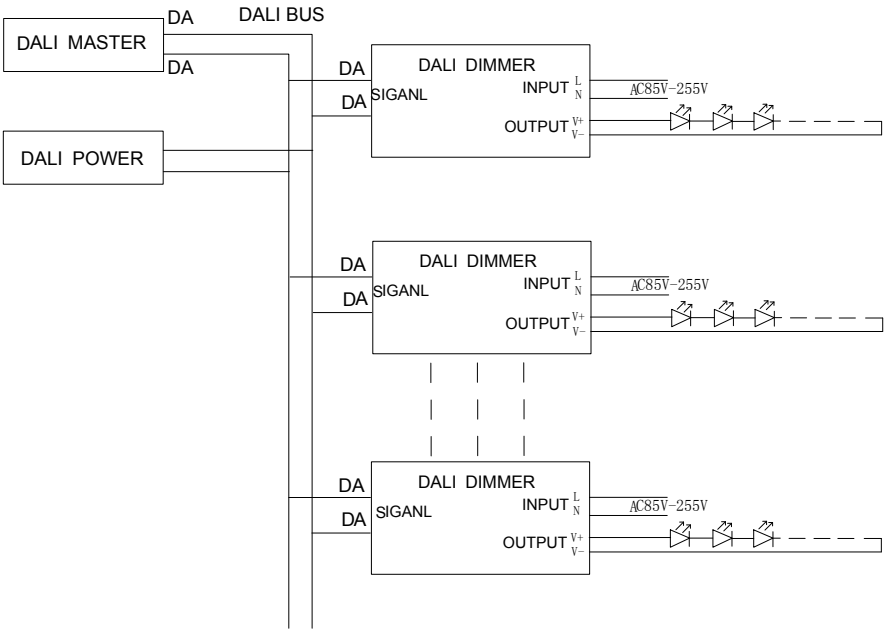
DALI MASTER
DA
DA
DALI BUS
DALI POWER
DA
DA
SIGANL
DALI DIMMER
INPUT L N
OUTPUT V+ V-
AC85V-255V
DA
DA
SIGANL
DALI DIMMER
INPUT L N
OUTPUT V+ V-
AC85V-255V
DA
DA
SIGANL
DALI DIMMER
INPUT L N
OUTPUT V+ V-
AC85V-255V