4 Channel High Voltage LED Strip DMX512 & RDM Decoder

Model No.: S4-DX

RDM/Stand-alone function/Two PWM frequency/Linear or logarithmic dimming/Numeric display

Features

- Comply with the DMX512 standard protocols.
- Digital numeric display, set DMX decode start address by bottons.
- RDM function can realize intercommunication between DMX master and decoder. For example, DMX decoder address can be set by DMX master console.
- 1/2/4 DMX channel output selectable.
- PWM frequency 2000/500Hz selectable.
- Logarithmic or linear dimming curve selectable.
- Stand-alone dynamic mode and 4 channel dimmer mode selectable, which be controlled by buttons with built-in programs, instead of DMX signal.
- Green terminal, XLR3 and RJ45 port DMX signal input.

CE RoHS emc LVD

Technical Parameters

Input and Output	
Input voltage	110-240VAC
Input current	8A
Output voltage	4 x (110-240)VDC
Output current	4CH,2A/CH
Output power	4 x (220-480)W

Environment	
Operation temperature	Ta: -30°C ~ +55°C
Case temperature (Max.)	Tc: +85°C
IP rating	IP20

Safety and EMC	
EMC standard (EMC)	EN55032:2015, EN61000-3-2:2014, EN61000-3-2:2013, EN55024 :2010/A1:2015
Safety standard(LVD)	EN 61347-1:2015 EN 61347-2-11:2015
Certification	CE,EMC,LVD

Warranty and Protection	
Warranty	5 years
Protection	Over load

Mechanical Structures and Installations

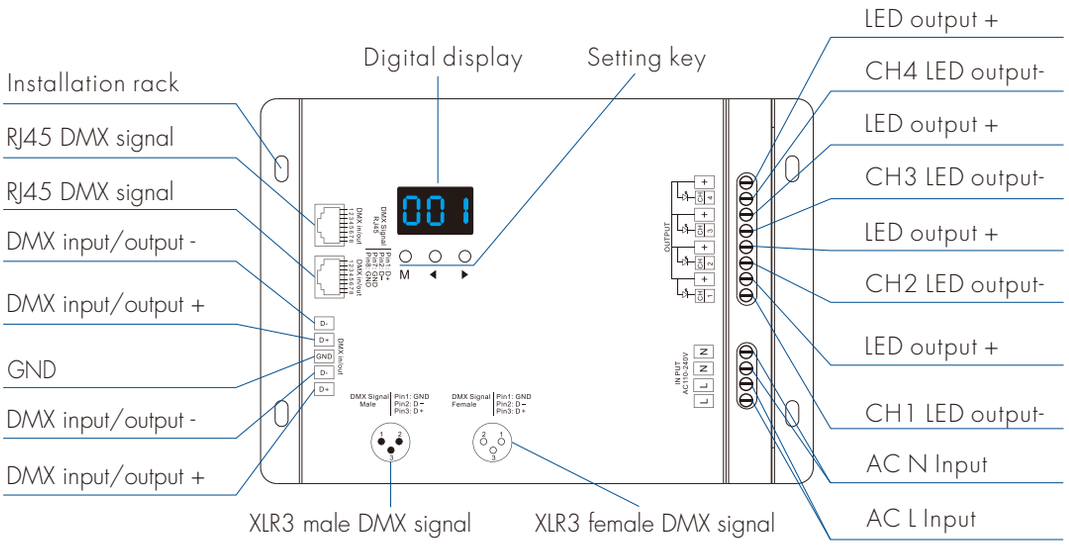

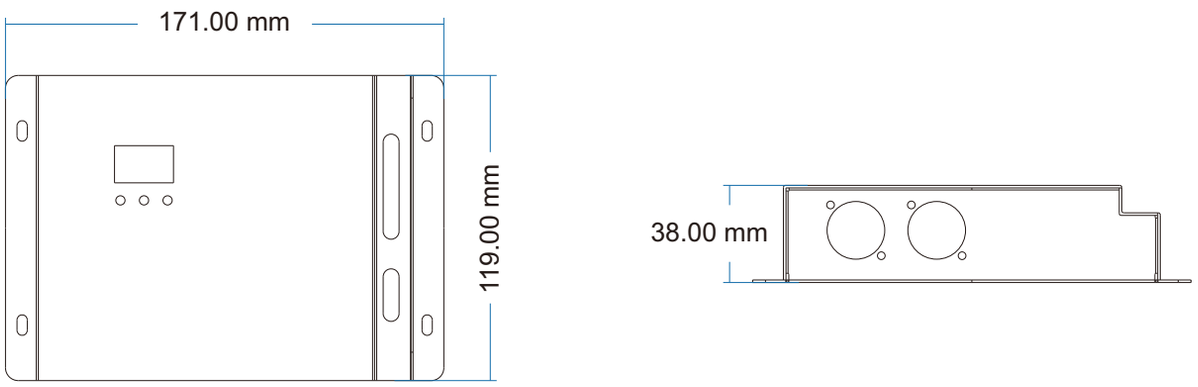

Wiring Diagram

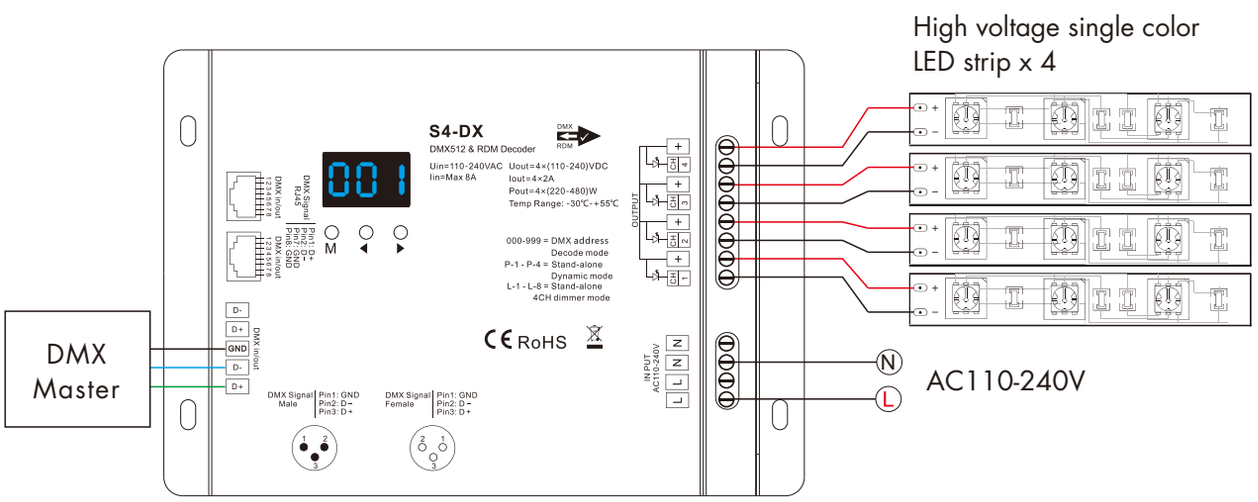

Caution:

This controller apply for high voltage LED strip, please carefully ensure all wire connections and polarities are correct and secure before applying power, otherwise this controller or high voltage LED strip will be damaged.

Operation

System parameter setting

- Long press M and ◂ key in the same time for 2s, prepare for setup system parameter: decode mode, output PWM frequence, output brightness curve, automatic blank screen. short press M key to switch four item.
- Decode mode: short press ◂ or ▸ key to switch 1/2/4 channel decode mode("d-1","d-2" or "d-4"). When set as 1 channel decode, the decoder occupy only 1 DMX address, and four channel output the same brightness of this DMX address.
- Output PWM frequence: short press ◂ or ▸ key to switch 500Hz("F-L") or 2KHz("F-H"). Higher PWM frequency, will cause lower output current, but more suitable for camera.
- Output brightness curve: short press ◂ or ▸ key to switch linear curve("C-L") or logarithmic curve("C-E").
- Automatic blank screen: short press ◂ or ▸ key to switch enable ("bon") or disable("boF") automatic blank screen.
- Long press M key for 2s or timeout 10s, quit system parameter setting.

DMX mode

- Short press M key, when display 001~999, enter DMX mode.
- Press ◂ or ▸ key to change DMX decode start address(001~999), long press for fast adjustment.
- If there is a DMX signal input, will enter DMX mode automatically.
- DMX Dimming: Each S4-DX DMX decoder occupy 4 DMX address when connecting the DMX console. For example, the defaulted start address is 1, their corresponding relationship in the form:

DMX mode
(001~999)

DMX Console	DMX Decoder Output
CH1 0-255	CH1 PWM 0-100% (LED R)
CH2 0-255	CH2 PWM 0-100% (LED G)
CH3 0-255	CH3 PWM 0-100% (LED B)
CH4 0-255	CH4 PWM 0-100% (LED W)

Stand-alone dynamic mode

- Enter stand-alone dynamic mode only when DMX signal is disconnected or lost.
- Short press M key, when display P-1~P-4, enter stand-alone dynamic mode.
- Press ◂ or ▸ key to change dynamic mode number(P-1~P-4).
- Each mode can adjust speed and brightness. Long press M key for 2s, prepare for setup speed or brightness. Short press M key to switch two item. Press ◂ or ▸ key to setup value of each item. Mode speed: 1-10 level speed(S-1, S-9, S-F). Mode brightness: 1-10 level brightness(b-1, b-9, b-F). Long press M key for 2s, or timeout 10s, quit setting.

Stand-alone dynamic mode
(P-1~P-4)

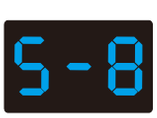

Speed
(8 level)

Brightness
(10 level,100%)

Dynamic mode list

No.	Name
P-1	4ch single light on/off in sequence
P-2	4ch single light chase in sequence
P-3	4ch light fadein and fadeout synchronously
P-4	4ch light fadein and fadeout in sequence

Stand-alone dimmer mode

- Enter stand-alone dimmer mode only when DMX signal is disconnected or lost.
- Short press M key, when display L-1~L-8, enter stand-alone dimmer mode.
- Press ◄ or ► key to change dimmer mode number(L-1~L-8).
- Each dimmer mode can adjust each channel brightness independently.
  Long press M key for 2s, prepare for setup four channel brightness.
  Short press M key to switch four channel(100~1FF, 200~2FF, 300~3FF, 400~4FF).
  Press ◄ or ► key to setup brightness value of each channel.
  Long press M key for 2s, or timeout 10s, quit setting.

Stand-alone dimmer mode
(L-1~L-8)

Restore factory default parameter

- Long press ◄ and ► key for 2s, restore factory default parameter, display"RES".
- Factory default parameter: DMX decode mode, DMX decode start address is 1, 4 channel decode, high PWM frequence output, logarithmic brightness curve, dymamic mode number is 1, dimmer mode number is 1, disable automatic blank screen.

Dimming curve setting

Linear dimming curve

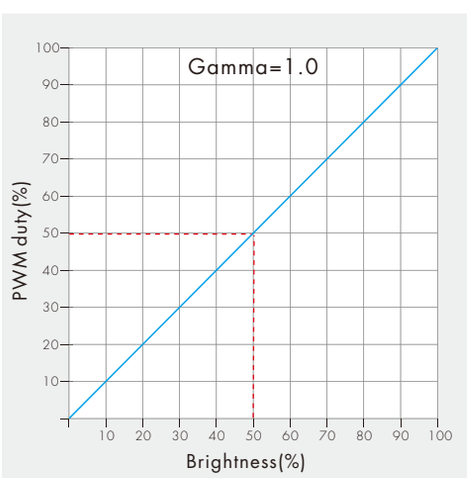
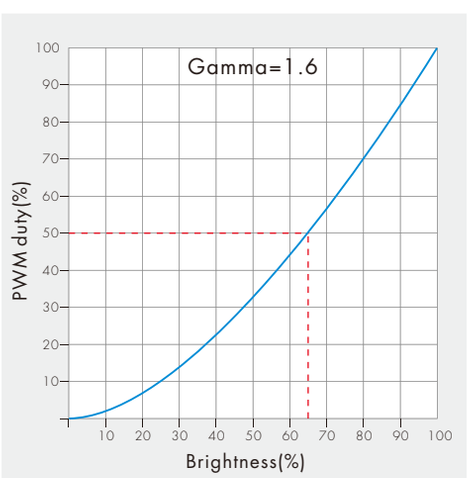
Logarithmic dimming curve